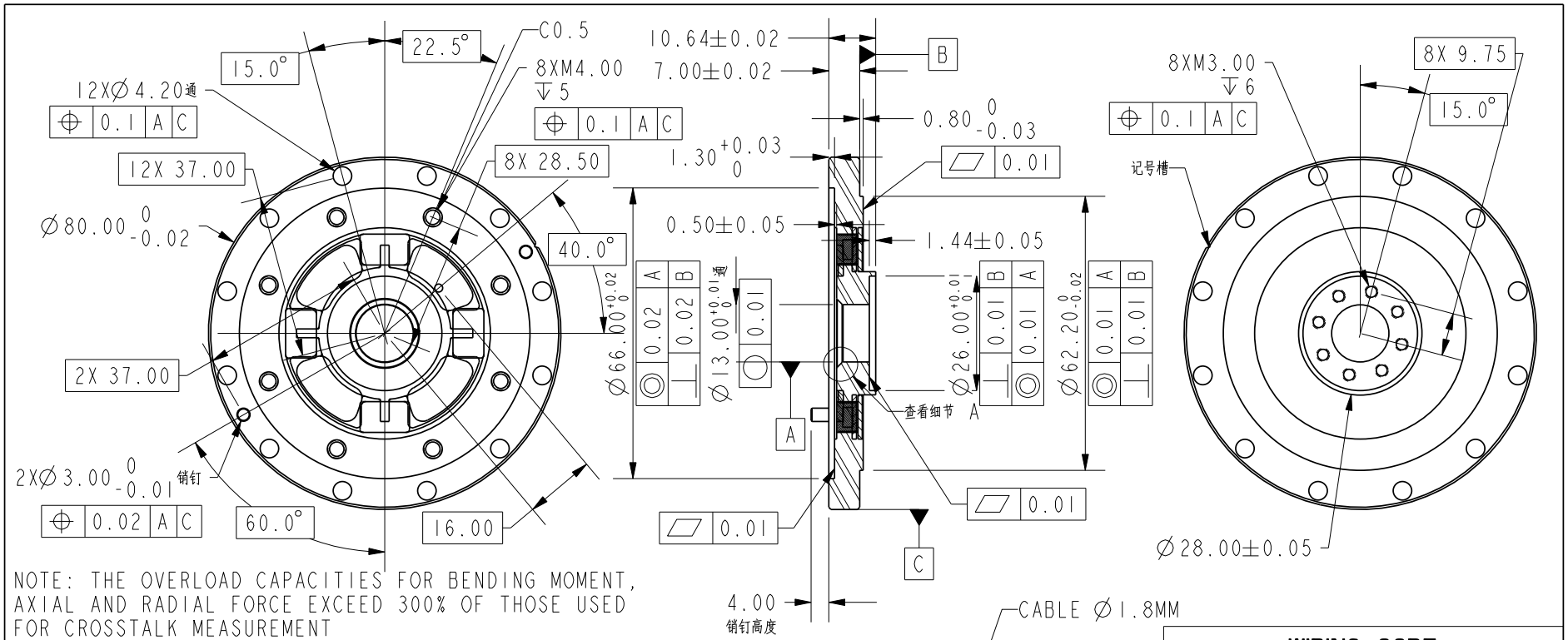

NOTE: THE OVERLOAD CAPACITIES FOR BENDING MOMENT, AXIAL AND RADIAL FORCE EXCEED 300% OF THOSE USED FOR CROSSTALK MEASUREMENT

SPECIFICATIONS

CAPACITY (Nm)	100
OVERLOAD CAPACITY (%F.S.)	300
OUTPUT @ F.S. (V) NOMINAL	2.5±2 *
POWER SUPPLY (V)	4.5 TO 5V
BRIDGE RESISTANCE (Ω) NOMINAL	350
NON-LINEARITY (%F.S.)	0.5
HYSTERESIS (%F.S.)	1.0
OPERATING TEMP. RANGE (°C)	-20 TO +100
CROSSTALK (%F.S.)	1.0
AXIAL FORCE FOR CROSSTALK (N)	300
RADIAL FORCE FOR CROSSTALK (N)	500
BENDING MOMENT FOR CROSSTALK (Nm)	50
TORSION ANGLE (CALCULATED)	0.05°
TORSIONAL STIFFNESS (KNm/RAD)	110
BENDING STIFFNESS (KNm/RAD)	20
MASS (g)	217

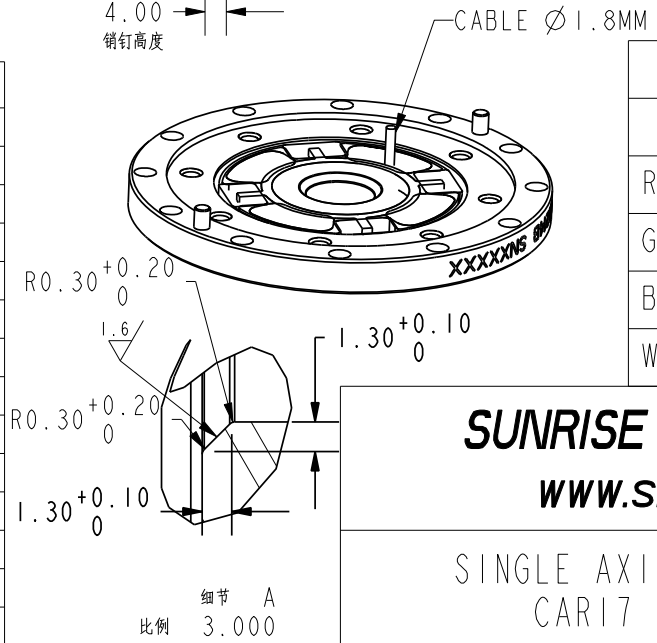

WIRING CODE

COLOR	FUNCTION
RED	+EX
GREEN	+SIG
BLACK	GND
WHITE	-SIG

SUNRISE INSTRUMENTS

www.srisensor.com

SINGLE AXIS TORQUE LOADCELL
CAR17 D80MM, 100 Nm

UNLESS OTHERWISE SPECIFIED DIMENSIONS ARE IN MM	M2214B	REV. 0.7